Revision:	Changes:	Date:
1.0	Initial Case, PCN: RVD002-107	2026.11.18

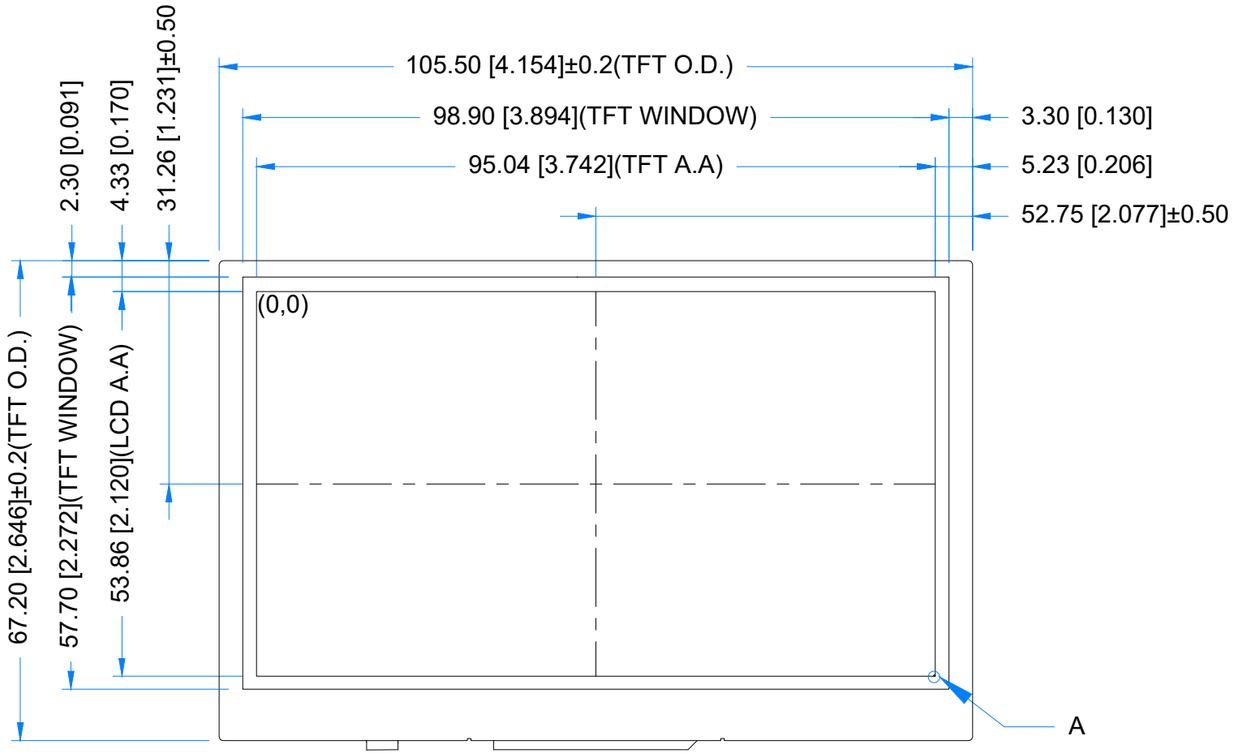

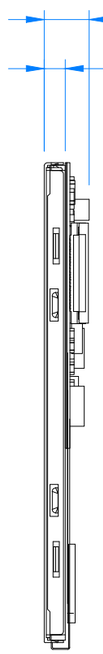

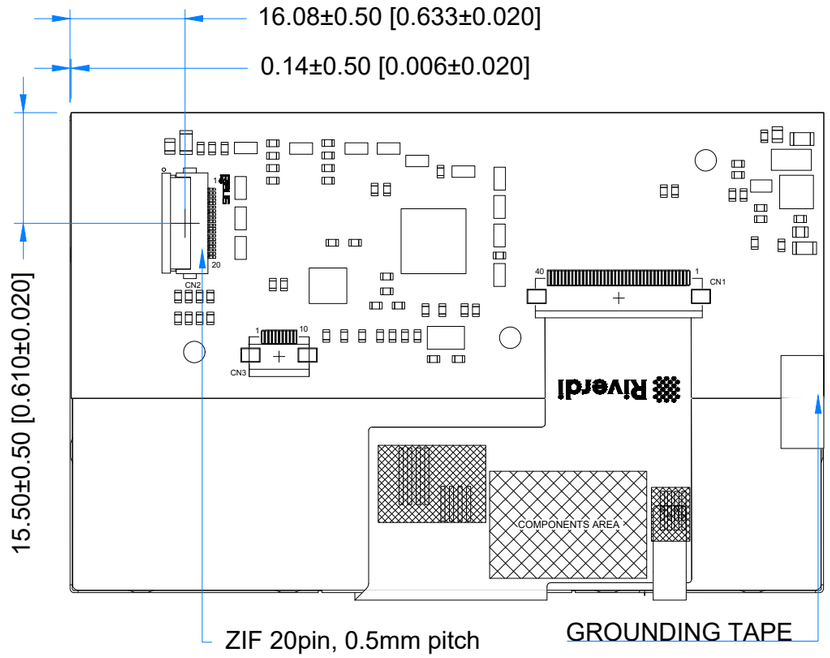

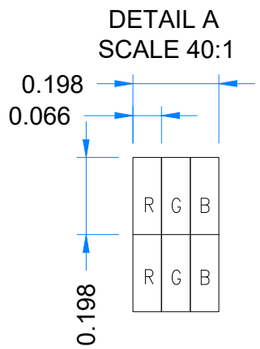

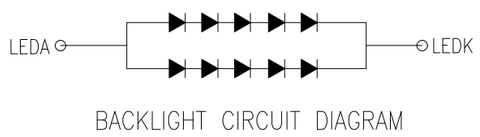

BACKLIGHT CIRCUIT DIAGRAM

PINOUT ON THE 2ND PAGE

TFT NOTES:
1. DISPLAY TYPE: TRANSMISSIVE, NORMALLY WHITE
2. RESOLUTION: 480x272
3. VIEWING ANGLE: 12 O'CLOCK
4. INTERFACE: SPI/I2C
5. DRIVER IC ON THE BOARD: BT816
6. SUPPLY VOLTAGE FOR MODULE: 3.3V
7. SUPPLY VOLTAGE FOR BACKLIGHT: 5.0V, BUILT-IN LED DRIVER

GENERAL NOTES:
1. SURFACE LUMINANCE: 550cd/m^2
2. OPERATING TEMPERATURE: -20°C ~ 70°C
3. STORAGE TEMPERATURE: -30°C ~ 80°C
4. WITHOUT INDIVIDUAL TOLERANCE: ±0.3mm
5. RoHS COMPLIANT

PN: RVT43ALBNWN00 V3				Riverdi
SN:				
DRAWN:	M.Stabinski	2026.11.18	1:0.86	
CHECKED:	M.Wierzbowski	2026.11.18	[mm]	
APPR:	M.Wierzbowski	2026.11.18	ISO A3	P. 1 of 1

CONNECTOR 2			
Pin No.	Desc.	Pin No.	Desc.
1	VDD	11	GPIO/IO2
2	GND	12	GPIO/IO3
3	SPI_SCLK	13	GPIO2
4	MISO/IO1	14	GPIO3
5	MISO/IO0	15	NC
6	CS	16	NC
7	INT	17	BLVDD
8	PD	18	BLVDD
9	NC	19	BLGND
10	AUTIO_OUT	20	BLGND